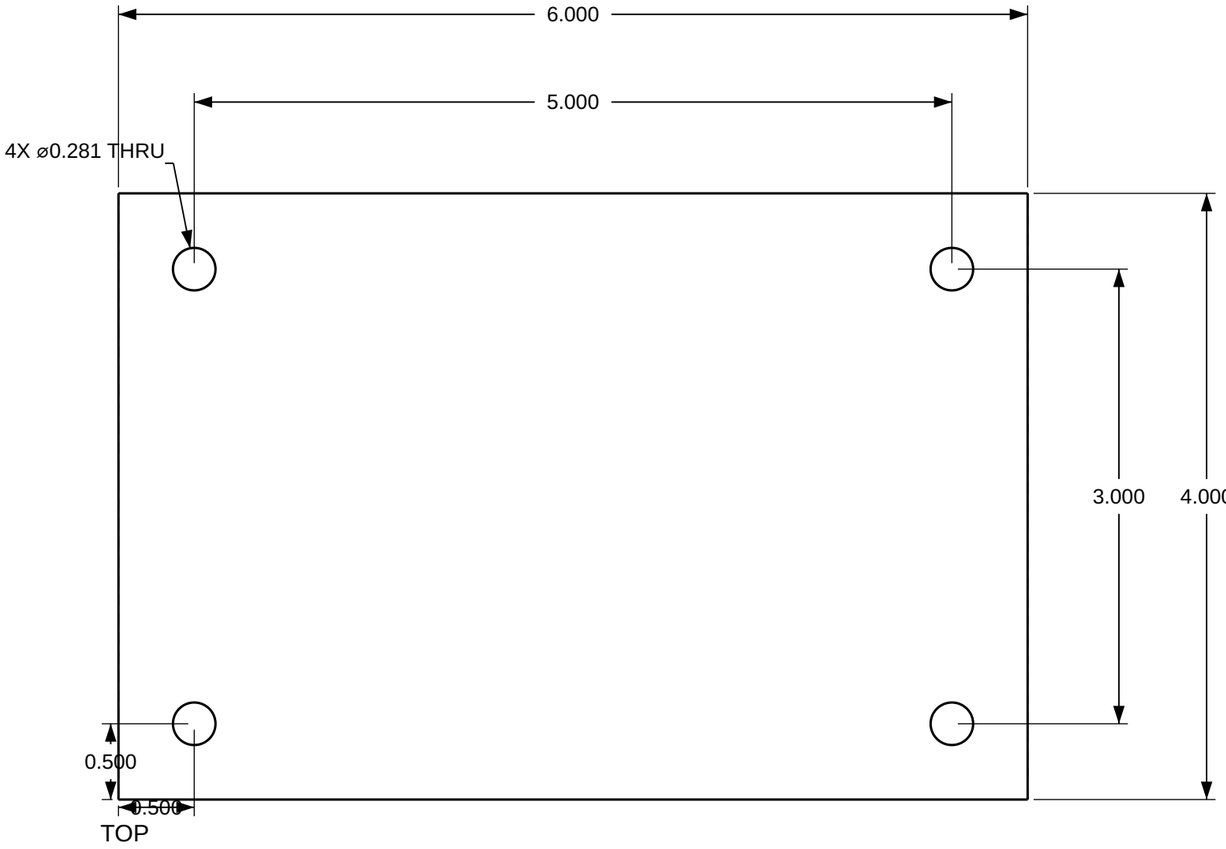

TOP



FRONT



RIGHT

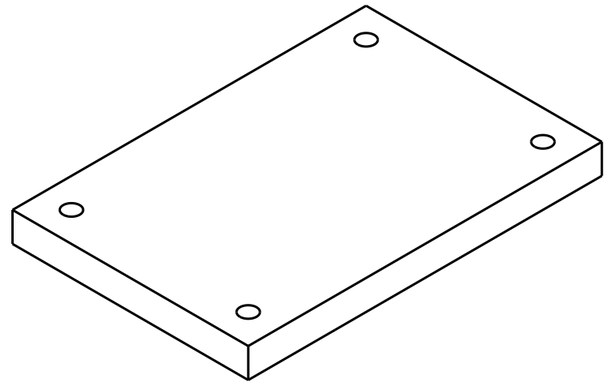

ISOMETRIC

NOTES:
1. BREAK ALL SHARP EDGES .010-.020.
2. FINISH: CLEAR ANODIZE.
3. UNLESS OTHERWISE SPECIFIED, TOLERANCES PER TITLE BLOCK.

UNLESS OTHERWISE SPECIFIED: DIMENSIONS ARE IN INCHES TOLERANCES: FRACTIONAL ± ANGULAR: MACH ± BEND ± TWO PLACE DECIMAL ± THREE PLACE DECIMAL ± DO NOT SCALE DRAWING		NAME	DATE
	DRAWN		2026-11-25
	CHECKED		
	ENG APPR.		
INTERPRET GEOMETRIC TOLERANCING PER:	MFG APPR.		
MATERIAL 6061-T6	Q.A.		
FINISH	COMMENTS:		

TITLE: BASE PLATE

SIZE	DWG. NO.	REV
B	HS-101	A

SCALE: 1:1	WEIGHT: 1.164 LB	SHEET 1 of 1